RDP Customer Document

Technical Manual
Transducer Indicator
TYPE E309

Doc. Ref CD1602S

This manual applies to units of mod status 8 ONWARDS

BS EN ISO 9001
Certificate No. FM13141

Affirmed by Declaration
of Conformity

USA & Canada

RDP Electrosense Inc.
2216 Pottstown Pike
Pottstown, PA 19465
U.S.A.
Tel (610) 469-0850
Fax (610) 469-0852
E-mail info@rdpe.com
www.rdpe.com

All other countries

RDP Electronics Ltd
Grove Street, Heath Town,
Wolverhampton, WV10 0PY
United Kingdom
Tel: +44 (0) 1902 457512
Fax: +44 (0) 1902 452000
E-mail: sales@rdpe.com
www.rdpe.com

I N D E X

1. INTRODUCTION 3

1.1 IMPORTANT SAFETY TEST INFORMATION. 3
1.2 Certificate of EMC Conformity 4

2. INSTALLATION INSTRUCTIONS 5

2.1 EMC Requirements 5
2.2 Power Connections 5
2.3 Input and Output Signal Connections 6
2.4 Transducer Connections (LVDT & Half bridge) 7

3. FRONT PANEL CONTROLS 8

3.1 Zero Potentiometer 8
3.2 Gain Potentiometer 8
3.3 Decimal Point Switch (DP) 8
3.4 Limits Switch 8
3.5 Limit Level Potentiometers 8

4. REAR PANEL CONTROLS 9

4.1 Gain Range Switch & Selection 9
4.2 Zero Input Switch 10
4.3 Zero Suppression Switch (Coarse Zero) 10
4.4 Output Gain Potentiometer 11
4.5 Output 0mA/4mA Potentiometer 11
4.6 Display Hold (Connector PL2) 11
4.7 Display Test (Connector PL2) 11

5. INTERNAL CONTROLS 13

5.1 Essential precautions prior to opening unit. 13
5.2 Supply Voltage 13
5.3 Limits Mode 13
5.4 Frequency 14

6. SETTING-UP PROCEDURE 15

6.1 Factory-Calibrated Systems 15
6.2 Bipolar calibration (e.g. ±5.000mm display) 15
6.3 Unipolar calibration (e.g. 0 to 10.000mm display) 15
6.4 High Temperature LIN Transducers 15

7. SPECIFICATION 16

8 APPLICATION NOTES 18

8.1 Electrical Interference Problems 18
8.2 Bench/portable instrument 19

9 WARRANTY AND SERVICE 20

Table of Figures

Fig. 1 Connection for LVDT Transducers 7
Fig. 2 Connections for Differential Inductance (Half Bridge) Transducers 7
Fig. 3 Internal control locations 12
Fig. 4 Limits graphic with normal mode-link setting 13

1. INTRODUCTION

The E309 is an excitation/signal conditioning unit designed for use with LVDT, half-bridge and similar a.c. transducers. A digital display provides indication, in engineering units, of displacement, pressure, etc. together with analogue voltage and current outputs. Two high-speed limit detectors provide volt-free relay outputs.

Features include:

a) Simple setting-up via switches/potentiometers.
b) Coarse gain and zero switches for long-term stability.
c) Standard ±10v and 0/4-20mA analogue output.
d) Bench or panel-mounting metal DIN case.
e) Two independent limit detectors settable for Hi or Lo operation, with changeover relay contacts and logic outputs.
f) Display-hold and lamp-test facilities.
g) Front panel switch for decimal point position.
h) Selection of 5kHz or 2.5kHz carrier frequency.
i) Large, bright, 4½ digit display.
j) Shielded connectors for improved EMC.

1.2 IMPORTANT SAFETY TEST INFORMATION.

READ AND UNDERSTAND THIS MANUAL BEFORE USING THE INSTRUMENT

ELECTRICAL SAFETY CHECKS

This instrument was checked for electrical safety, using a portable appliance test instrument, prior to despatch.

If the user wishes to carry out his own tests, the following points must be followed:

(1) This Safety Class 1 apparatus has a low (<3A) fuse rating and a low current rated power connection cable.

(2) It is recommended that when carrying out an earth bond test (BS EN 61010-1 Section 6.5.1.2), the test current of 25A should not be applied for more than **six seconds**.

(3) In general it is **not** recommended that high voltage (e.g. 1.5kV) insulation tests are carried out (BS EN 61010-1, Section 6). This could cause damage to suppressor components.

1.2 Certificate of EMC Conformity

DECLARATION OF CONFORMITY

RDP ELECTRONICS LTD.
Grove Street Heath Town
Wolverhampton West Midlands
WV10 0PY
United Kingdom

We declare that the product described in this technical manual is manufactured by RDP Electronics Limited and performs in conformity to the following:

The Electromagnetic Compatibility Directive 2014/30/EU

The Low Voltage Safety Directive 2014/35/EU

RoHS 2 Directive 2011/65/EU

R D Garbett
Director
RDP Electronics Limited

2. INSTALLATION INSTRUCTIONS

2.1 EMC Requirements

For full EMC compliance, only shielded multi-core cables should be used for connection to this instrument; the cable shield to be terminated by means of a short "pig-tail" and connected to the connector cover.

The metal case should be earthed. This would usually be achieved via the green/yellow core of the supply cable.

NOTES

1 Cable shields to be earthed at only one end - the instrument end.

2 When the instrument is a small part of a large electrical installation, ensure the cables to and from the instrument are segregated from electrically noisy cables.

3 Ensure cables to and from the instrument are routed away from any obviously powerful sources of electrical noise, e.g. electric motors, relays, solenoids.

4 ESD precautions should be used when working on the instrument circuit board with the lid removed. The user should ensure he is "earthed" by use of an earthed wrist strap or at least touching earth before touching any component including wires, terminals or switches.

5 The body of the transducer should be earthed. If the transducer fixing attachments to not provide a good earth, then an earth strap should be used.

Refer to Section 8 where electrical interference may be a problem.

2.2 Power Connections

Refer to section 5.2. The ac supply is connected via a 2 metre, 3-core cable (supplied) as follows:-

LIVE (120/240v)	-	BROWN
NEUTRAL	-	BLUE
EARTH/GROUND	-	GREEN and YELLOW

Where a unit has an internal supply fuse, the value will be indicated in the specification. If no fuse is specified, then an external one should be fitted, of the anti-surge type, with a value commensurate with the VA rating of the unit as indicated in the external label. Units should always be grounded via the supply for reasons of safety and electrical noise. The green and yellow wire is normally internally connected to the instrument common or 0V line and hence to the transducer cable shield.

Refer also to the section on internal controls for details of supply voltage selection, and to the Application Note on electrical interference.

2.3 Input and Output Signal Connections

Refer also to Fig. 3 and Rear Panel Printing.

Transducer analogue output and relay output connections are made via shielded connectors at the rear of the instrument as shown below:

Note 1
The limit relay contacts should only be used to switch:
a) DC resistive or reverse-diode protected inductive loads;
b) AC resistive loads.

AC coils should be operated via a slave dc relay or SCR module.

FUNCTION		PIN No.		PLUG Viewed from rear
Limit Relay 1 (Note 1)	N.O.	5	PL1 Limits Output 9-way D-type	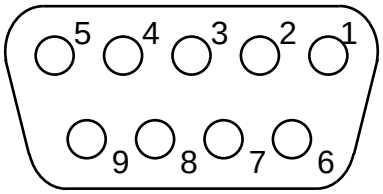
	Common	4		
	N.C.	3		
Limit Relay 2 (Note 1)	N.O.	2		
	Common	1		
	N.C.	9		
Logic Outputs Limit 2, Limit 1		7, 8		
Logic/Digital Common (Mod.19 units onwards)		6		
Display Hold Input		1	PL2 Analogue Output/ Digital Input 7-way DIN type	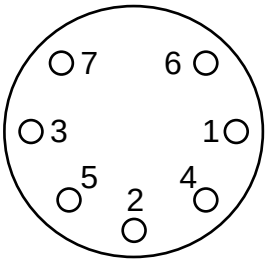
Lamp Test Input		2		
Analogue Output ±10V		3		
Analogue Output common/0V		4		
Analogue Output 0/4-20mA		5		
No connection		6		
Digital 0V		7		
Excitation +		1	PL3 Transducer Connections 7-way DIN type	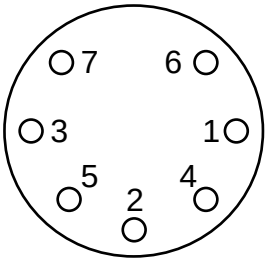
Excitation –		2		
Signal +		3		
Signal –		4		
Cable shield		Con. shell		
No connection		6, 7		

2.4 Transducer Connections (LVDT & Half bridge)

TRANSDUCER INPUT CONNECTOR

Transducer connections are made via the 7 pin DIN connector (PL3) marked 'Transducer'. The diagram shows the REAR view of the connector.

Rear view

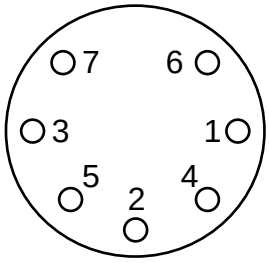

Fig. 1 Connection for LVDT Transducers

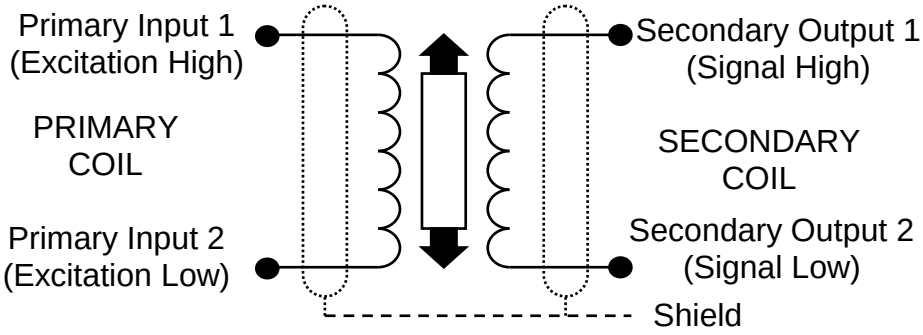

Function	PL3 PIN
Excitation Hi	1
Excitation Lo	2
Signal Hi	3
Signal Lo	4
Shield	Con. shell

Some RDP LVDTs have a BLACK wire. This must be insulated.

If when connected, the phase of the amplifier output is not as required (for example, an inward moving armature causes a rising amplifier output when a falling output is required) then reversing the signal high and signal low wires will correct this.

Fig. 2 Connections for Differential Inductance (Half Bridge) Transducers

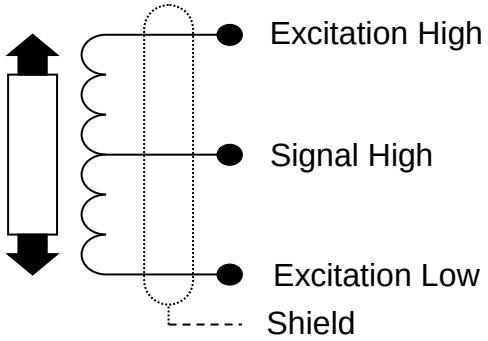

Function	PL3 PIN
Excitation Hi	1
Excitation Lo	2
Signal Hi	3
Shield	Con. Shell

In addition to these connections, it is necessary to add two bridge completion resistors to compensate for the fact that the transducer is only half bridge. For RDP transducers, the resistors should be 1k Ohms, high stability. These may be added in one of two places:-

a) In the connector, between pins 1 and 4 and pins 2 and 4.

b) Inside the instrument in locations R19 and R20 (see Fig. 3 for location), read 5.1 before commencing. See schematic below.

If when connected, the phase of the amplifier output is not as required (for example, an inward moving armature causes a rising amplifier output when a falling output is required) then reversing the excitation high and excitation low wires will correct this.

3. FRONT PANEL CONTROLS

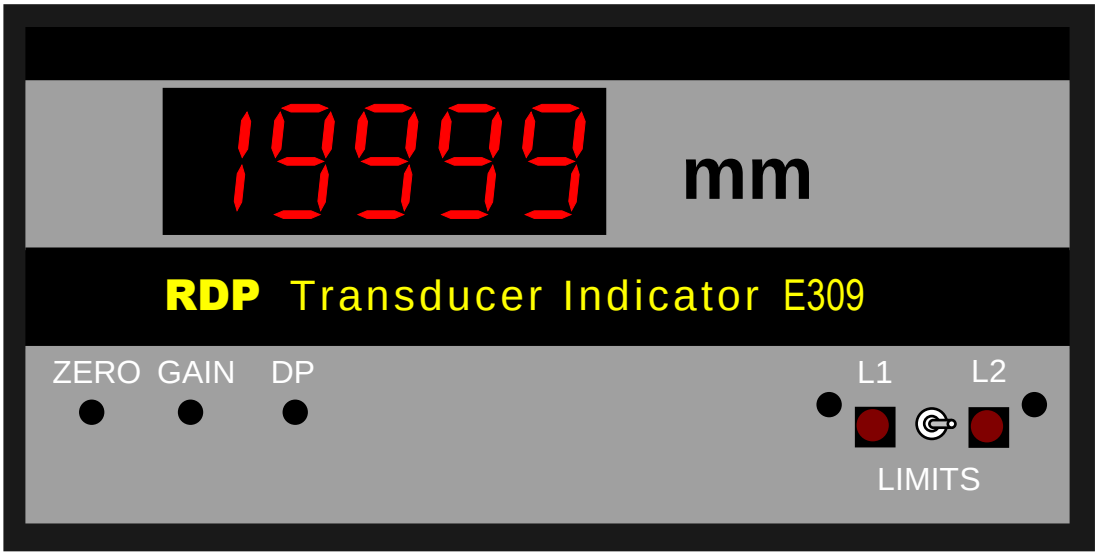

All potentiometers are multi-turn, screwdriver-adjusted.

3.1 Zero Potentiometer

This provides fine adjustment of the display and analogue output zero levels. Its range will depend on the setting of the Fine Gain control.

3.2 Gain Potentiometer

(Refer also to 4.1)

This provides a 2:1 adjustment of amplifier gain and is effective on both the display and analogue outputs. Together with the Gain Range switch, allows full scale setting for any input voltage in the specified range.

3.3 Decimal Point Switch (DP)

This is a screwdriver-adjusted rotary switch. In some positions two or three points may be lit simultaneously: continue rotation (in either direction) until the required point is lit.

3.4 Limits Switch

With this 3-way switch in the central (normal) position, the display monitors the transducer signal. When set to the left (L1) the display indicates the level of Limit 1. When set to the right, the display indicates the level of Limit 2.

3.5 Limit Level Potentiometers

These are used to set the limit levels while being monitored by the display as in 3.4. The range of these controls is ±full scale (±19999 digits).

4. REAR PANEL CONTROLS

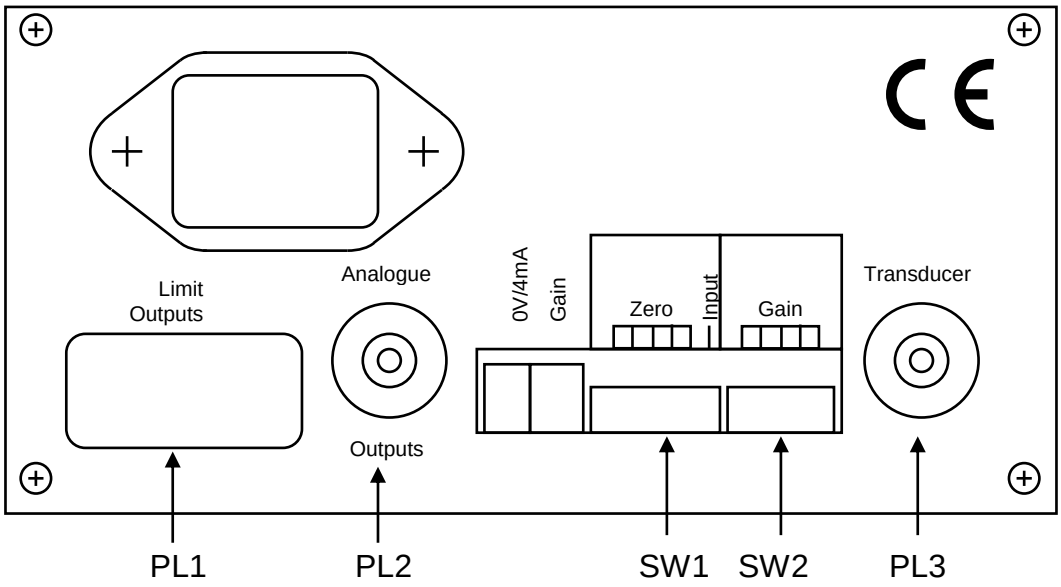

4.1 Gain Range Switch & Selection

Refer also to 3.2 and Section 4.1.1
DIL switch SW2 is used to select the required amplifier gain range as shown in the table below (Note: set lever DOWN for ON).

4.1.1 Gain switch lever selection table.

Typically, transducer manufacturers' data sheets or calibration certificates will give a figure allowing the full-scale output to be calculated. Possible formats for this are as follows, **the examples assume a transducer range of ±50mm.**

Sensitivity format	**Explanation**	**To convert to F.S. output**
mV/V/mm e.g. 46mV/V/mm	Millivolts of output, per volt of excitation, per mm of travel	Sensitivity x 5 x range in mm e.g. 0.046 x 5 x 50 = 11.5V
V/V at full-scale, e.g. 2.3 V//V	Volt of output, per volt of excitation, at full-scale	Sensitivity x 1 e.g. 2.3 x 5 = 11.5V
mV/mm at a specified excitation voltage. E.g. 230mV/mm at 5V exc.	Millivolts of output, per mm of travel, given a specified excitation voltage.	(Sensitivity / specified excitation voltage) x 0.5 x range in mm e.g. (0.230/5) x 5 x 50=11.5V
The standard excitation of the E309 is 5V, as used in the calculations above.		

The following table shows the band of transducer full-scale output voltages appropriate to each of the 13 Gain Range Settings. For example, a transducer with a full-scale output of 11.5V would be correctly set as gain range 2, if the display was to show ±50.00mm (as in the example above).

Gain Range	Lever(s) ON	Equivalent Input Signal Range V rms approx.	Maximum Display Settable
1	1	10 to 20	2000 to 4000
2	1 + 3	10 to 20	4000 to 8000
3	1 + 4	10 to 20	8000 to 16000
4	1 + 5	13 to 20	19999
5	2	6.5 to 13	“
6	2 + 3	3 to 6.5	“
7	2 + 4	1.5 to 3	“
8	2 + 5	0.8 to 1.5	“
9	None	0.4 to 0.8	“
10	3	0.2 to 0.4	“
11	4	0.1 to 0.2	“
12	5	0.05 to 0.1	“
13	4 + 5	0.03 to 0.05	“

Note for Gain Ranges 1 - 4:
The max input signal level should not exceed 20v rms otherwise non-linearity could occur. Ranges 1 - 3 allow lower full scale display values to be used with relatively high input signals. For example, if a F.S. value of 3000 is required for an input signal of 10v:
(a) Multiply the required F.S. value by 20v/10v e.g. 3000 X 2 = 6000
(b) Choose a gain range which includes this display value, i.e. range 2 (4000 to 8000).

Notes for Gain Ranges 5 - 13:
For lower input signal levels to give less than the full 19999 display, calculate the required gain range as for example:
To display a full scale input signal of 1.2v rms as 2500: 19999/2500 = 8
Equivalent input for full scale is 1.2 x 8 = 9.6v, therefore use gain range 5 (6.5 to 13v).

4.2 Zero Input Switch

Lever 6 on the 6-lever ZERO switch, when set to ON (down), applies zero signal to the amplifier input (irrespective of transducer connection) to allow true amplifier zero display/output to be set via the ZERO control. This facilitates determining transducer centre-stroke position etc. without disconnection/linking.

4.3 Zero Suppression Switch (Coarse Zero)

Levers 1 to 5 of the 6-lever ZERO switch are used to zero the display/output when the range of the zero potentiometer is insufficient. The table below shows the amount and direction of display shift when different levers are switched ON. Note: the amount of shift will vary with the setting of the Gain potentiometer:

Lever(s) ON	Display Shift (approximate) and Direction	
1	Positive	2500 – 5000
1 + 3		5000 – 10000
1 + 4		10000 – 20000
1 + 5		20000
2	Negative	2500 – 5000
2 + 3		5000 – 10000
2 + 4		10000 – 20000
2 + 5		20000

4.4 Output Gain Potentiometer

This allows a small range of adjustment of the analogue output voltage (or current) with respect to the full-scale display reading. The normal setting is for ±10v (or 20mA) to correspond to ±19999 display.

4.5 Output 0mA/4mA Potentiometer

This allows a small range of adjustment of the analogue output current for 0-20 or 4-20mA systems. It is normally set so that zero display corresponds to an output current of 4mA.

4.6 Display Hold (Connector PL2)

Linking Pin 1 to Pin 7 (COM 0v) via a switch or relay holds the display value. Alternatively, a logic signal may be used; high to run and low to hold.
Timing: Normally the display is updated at a rate of 2½ times/second, or every 400mS. When a HOLD is applied, the A-D converter will continue its full cycle before holding the display.
The display will remain held as long as HOLD is low, but a high pulse of >300nS will initiate a new measurement cycle. If another pulse occurs before the cycle is complete it is ignored.

4.7 Display Test (Connector PL2)

Connecting Pin 2 to Pin 7 (COM 0v) via a switch or relay produces a 18888 display. Alternatively, a logic signal may be applied; high for normal operation, low to test.

Fig. 3 Internal control locations

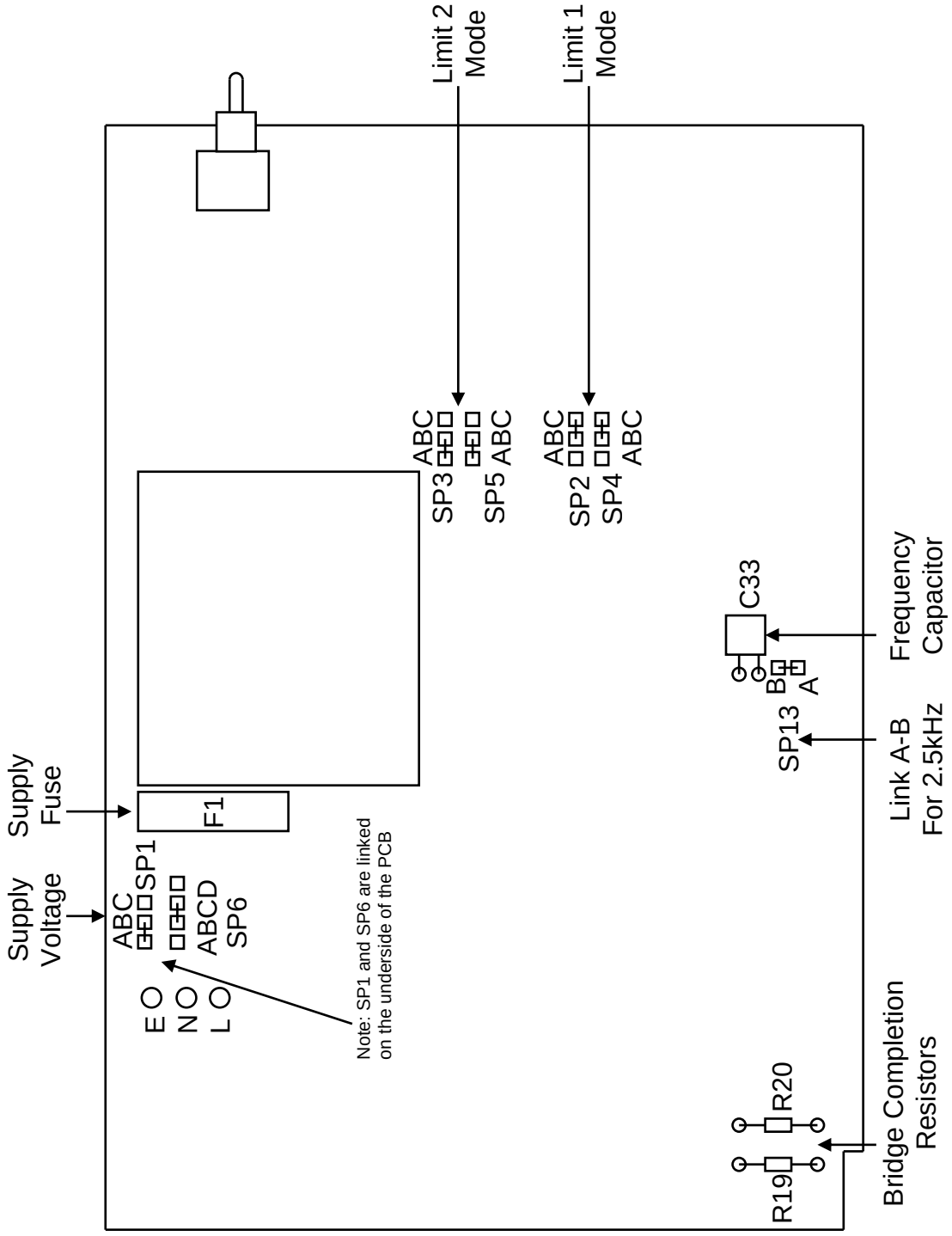

5. INTERNAL CONTROLS

Refer to Figure 3 for locations.

5.1 Essential precautions prior to opening unit.

These controls are accessible, after **FIRST DISCONNECTING THE SUPPLY,** by removing 6 screws from the rear panel and sliding the panel, together with the circuit board, rearwards.

5.2 Supply Voltage

Solder links are used to select the voltage as shown below:

Supply	Link		If you change the supply voltage setting, ensure that the appropriate label is fitted to the outside of the unit to avoid future confusion.
	SP1	SP6	
240 (normal)	A – B	B – C	
120	B – C	A – B and C – D	

5.3 Limits Mode

(Refer also to Figure 4)

Solder links are used to select the mode or polarity of each limit, i.e. “high” limit or “low” limit. Units are normally supplied so that:

(a) the relay of Limit 1 is normally energised until the transducer signal becomes more positive than the set point value, i.e. it operates in a fail-safe high limit mode.

(b) the relay of Limit 2 is normally energised until the transducer signal becomes more negative than the set point value, i.e. it operates in a fail-safe low limit mode.

Fig. 4 Limits graphic with normal mode-link setting

3a) High or low fail safe operation.

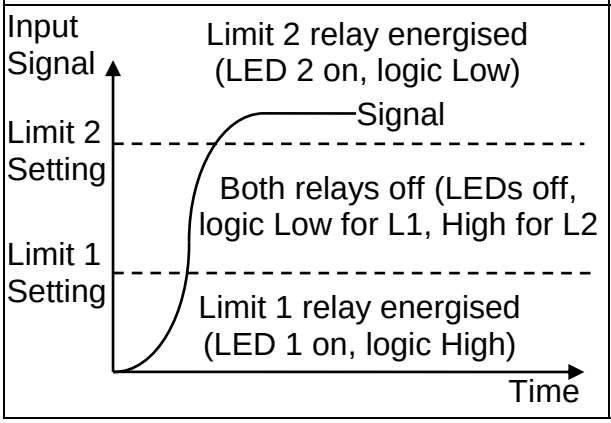

3b) Limits 1 and 2 levels reversed for fail-safe band-pass operation.

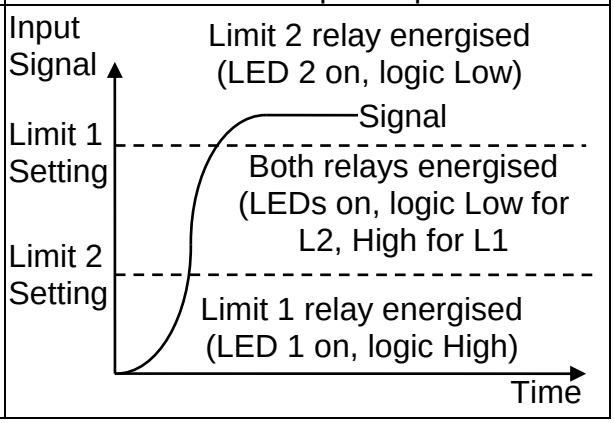

The operating mode of each limit may be selected via the solder pads as shown below:

Limit	Links	Fail-Safe High	Fail-Safe Low
L1	SP2 + SP4	B – C (normal)	A – B
L2	SP3 + SP5	B – C	A – B (normal)

Note 1	Two links must be changed per limit each time, e.g. to change L1 mode, change both SP2 and SP4.
Note 2	In all modes, when a relay is energised, the corresponding LED is lit.
Note 3:	The arrangement of the “normal” links allows use of a fail-safe pass-band between the two limit settings.
Logic Outputs**:**	The limits logic outputs are low (0) when the signal is more positive than the limit value and high (1) when the signal is more negative than the limit value. The logic is not affected by the reversing links SP2 - SP5 which operate only on the relays and LEDs.

5.4 Frequency

On units up to Mod 20E the excitation frequency can be changed from 5kHz to 2.5kHz by fitting solder link SP13. From Mod 21 onwards the facility is not available.

Excitation frequencies off 1 to 10 kHz are possible if stated when ordering.

6. SETTING-UP PROCEDURE

6.1 Factory-Calibrated Systems

When a transducer/monitor system has been calibrated at RDP, no setting-up is required. Connect the transducer to the rear-panel socket, switch on power and the display indicates the transducer output directly in engineering units. In case of problems:

(a) Check transducer wires are not broken.
(b) Check correct rear panel switch levers are set to ON.

6.2 Bipolar calibration (e.g. ±5.000mm display)

6.2.1 Connect the transducer, analogue output (if required) and relay output (if required) as detailed in Section 2. Set all rear panel switch levers to OFF (up).

6.2.2 Refer to Sections 4.1 and 4.1.1 to determine which GAIN levers to set to ON.

6.2.3 Set ZERO Input lever to ON (to zero the amplifier input signal) and adjust FINE ZERO for zero display.

6.2.4 Set ZERO Input to OFF and adjust the transducer (armature) for zero display. This determines the transducer centre-stroke position.

6.2.5 Move the armature to the positive full-scale position and adjust FINE GAIN for the correct display. (Note: the secondary or primary wires may be reversed to reverse the output polarity.)

6.2.6 Re-check the zero position then move the armature to the negative full-scale position. Check the display is correct.

The analogue output rear panel controls may be set simultaneously with steps 4 and 5.

6.3 Unipolar calibration (e.g. 0 to 10.000mm display)

Proceed as for half-stroke operation through steps 6.2.1 to 6.2.4 to determine the transducer centre-stroke position and then:

6.3.1 Move the armature to the position where zero display/output is required and use the gain controls to display the distance moved, e.g. if a final display of 0 to 80.00mm is required, move the armature inwards by 40mm and set the gain controls for a display of -40.00.

6.3.2 Refer to section 4.3 and use the Coarse Zero Switch and Fine Zero to set this display to zero, e.g. for -40.00 use lever 1 and Fine Zero.

6.3.3 Move the armature to the full scale position and check the display is correct, e.g. move to the +40mm position and check for 80.00 display.

Re-trim Fine Gain and Zero if necessary for consistent results.

If, for any reason, the coarse gain is changed, the whole procedure will need to be restarted.

6.4 High Temperature LIN Transducers

Proceed as in section 6.2 but, in section 6.2.3, instead of setting the zero input switch ON, remove the armature completely from the transducer and then set the display to zero.
Similarly, in section 6.2.4, instead of setting the switch to OFF, replace the armature and adjust it for zero display.

7. SPECIFICATION

7.1 Display	
Display size	11mm (0.43in) 7-segmen high brightness red LED
Range	±19999
Polarity Indicator	"-" sign displayed
Overrange	Flashing display
Decimal Points	4 positions via selector switch
Hold and Lamp Test	Via rear terminal connections to common or TTL level signals
Sample Rate	400mS
7.2 Power Supply	
Voltage	240V ac standard or 120V ac selected via solder links +10/-20%. 50/60Hz
Power	10VA typical
Fuse	250mA/S 20mm
7.3 General	
Operating Temperature	0°C to 55°C
Storage	-40°C to 85°C
Weight	1.3kg/2.9lb
7.4 Case	
Material	Black anodised aluminum
Bezel Size	144 x 72mm overall
Depth	190mm (behind bezel, excluding connectors)
Panel cut-out	139 x 67mm
7.5 Amplifier	
Input Range	50mV to 20V via potentiometer and Gain Range switch
Input Resistance	100kΩ
Linearity	±0.1% F.S. typical
Zero Stability	0.003% FS/°C typical (display): 0.01% (analogue output)
Gain Stability	0.003% FS/°C typical (display): 0.01% (analogue output) Optimum at ± full scale
Bandwidth	300Hz (flat)
Noise p-p	5mV/10µA typical
CMRR	120dB typical
Output Voltage	±10V at 5mA
Output Current	0 or 4-20mA into 0 to 500 ohms. This is an active output that should not be connected to any external power supply as this will damage unit.
Protection	Short-circuit proof
Note: Outputs normally factory-set so that ±19999 display corresponds to ±10V and 0 to +19999 display to 4-20mA	
7.6 Excitation	
Voltage	5V rms., 100mA max. Short-circuit proof.
Frequency	5kHz, ±5%: 1kHz-10kHz is possible if stated when ordering
7.7 Controls	
Coarse Zero Adjustment Range	±FS via 5-lever switch

Fine Zero Adjustment Range	±2000 to ±5000 digits according to Fine Gain setting
Analogue Output	Zero potentiometer range 0 to 10mA (for zero display). Gain potentiometer allows setting 10V output for displays between 2400 and 19999
7.8 Limits	(Refer also to Application Note, Section 8)
Set point range	±19999 via 20-turn potentiometer
Display	3-way switch for Limit 1/Normal/Limit 2 levels
Indication	2 LEDs on when relays on
Mode	Positive or negative going operation selected via solder links
Relays	2 changeover contact types. 0.3A at 120V ac/1A at 24V dc.
Operating time	5mS
Mechanical life	>12 x 10^6 operations
Accuracy	±0.1% of full scale typical
Hysteresis	±0.05% of full scale typical
Logic Outputs	TTL Source 2mA, sink 10mA
7.9 Connectors	
Transducer/Analogue Output	7-pin DIN shielded. Case grounded by socket
Limits Output	9-pin DIN type. Case grounded by rear panel. For max. V and I, see 7.8

8 APPLICATION NOTES

8.1 Electrical Interference Problems

When an E308 Transducer Indicator is used in an industrial application, some of the following points may be helpful to System Engineers to design a trouble-free installation.

8.11 In general the operation of electronic instruments and transducers can be affected by electrical interference.

8.12 This interference can be generated by the switching of large or reactive loads on the supply, causing the production of large voltage spikes and/or variation in the ac mains supply.

Higher frequency interference (radio frequency) is often generated by a large voltage (e.g. back e.m.f. from a coil) being switched by a contact. Generally a contact seen to arc whilst switching is producing RF interference.

8.13 The interference "signals" can enter a transducer measuring system in the following ways:

a) Direct pick-up by wiring to the instrument. The wiring can be a connection to the transducer supply input or control (e.g. trip relay).
b) Direct pick-up into the instrument.
c) Along the mains supply lines.

8.14 There are two methods of countering these problems:

a) Suppress the interference generation at source.
b) Prevent the interference gaining access to the instrumentation circuitry.

8.15 Suppression at source is often the best approach. AC coils can often effectively be suppressed by means of connecting, as close to the coil terminals as possible, a 100 ohm resistor in series with 0.1μF across the coil. Proprietary transient voltage clippers - either non-linear resistor or better semiconductor types - are very useful for suppression, mounted across coils and contacts.

8.16 An electrically noisy mains supply can be suppressed by means of a mains filter unit. These units in their simplest form consist of capacitors and inductors. Mounted at the point where the mains enters the instrument, they can be most effective. A constant voltage transformer is another effective way of cleaning up the mains.

8.17 Extra shielding of the transducer, cabling and instrument is a simple, low cost method of preventing particularly directed radiated RF type of interference.

Shielded cable should always be used to connect the transducer to the instrument. Shielded cable is often beneficial for other connections as well. The shield should only be earthed at the instrument end.

It is not good practice to mount the instrument near to contactors, motors, switch transformers, solenoids, etc. But where it is considered necessary to mount the instrument near to such devices, an extra steel enclosure around the instrument would be essential.

In extreme cases, the transducer cable should be run in a steel conduit.

8.18 Trip relays fitted inside the E308 should never be used to switch ac coils. The recommended arrangement is to use a dc slave relay as shown below.

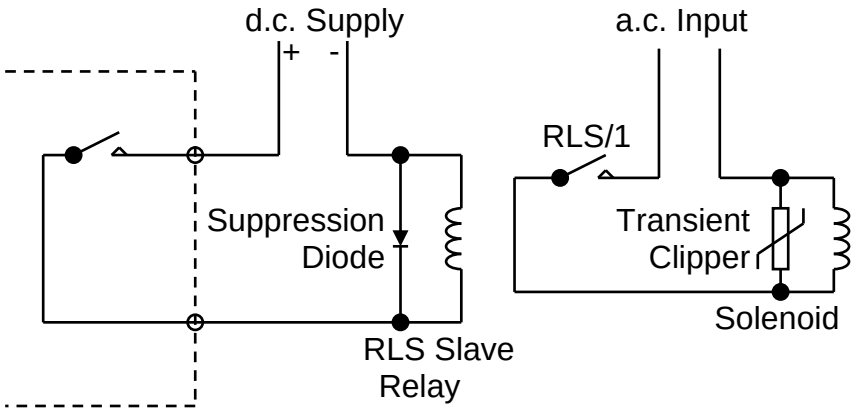

Wherever possible, TTL limit outputs should be used to:

a) reduce noise problems,
b) increase response speed,
c) increase life especially in repetitive applications where relay contact life may be significant.

8.2 Bench/portable instrument

The bench instrument (BI) version of the E309 instrument is a standard E309 mounted in an additional case incorporating the following features:
(a) extra physical protection
(b) carrying handle
(c) front panel dial-type ZERO control.

The standard E309 Technical Manual is applicable except that the overall dimensions of the BI case are:

Height 94mm
Width 216mm
Depth 235mm

and the weight is 2.1kg (4.6lb).

9 WARRANTY AND SERVICE

WARRANTY.

R.D.P. Electronics products are warranted against defects in materials or workmanship. This warranty applies for one year from the date of delivery. We will repair or replace products that prove to be defective during the warranty period provided they are returned to R.D.P. Electronics.

This warranty is in lieu of all other warranties, expressed or implied, including the implied warranty of fitness for a particular purpose to the original purchaser or to any other person. R.D.P. Electronics shall not be liable for consequential damages of any kind.

If the instrument is to be returned to R.D.P. Electronics for repair under warranty, it is essential that the type and serial number be quoted, together with full details of any fault.

SERVICE.

We maintain comprehensive after-sales facilities and the instrument can, if necessary be returned to our factory for servicing.

Equipment returned to us for servicing, other than under warranty, must be accompanied by an official order as all repairs and investigations are subject to at least the minimum charge prevailing at the date of return.

The type and serial number of the instrument should always be quoted, together with full details of any fault and services required.

IMPORTANT NOTES.

1. No service work should be undertaken by the customer while the unit is under warranty except with the authorisation of RDP Electronics.

2. If the instrument is to be returned to R.D.P. Electronics for repair, (including repair under warranty) it is essential that it is suitably packed and that carriage is insured and prepaid. R.D.P. Electronics can accept no liability whatsoever for damage sustained during transit.

3. It is regretted that the above warranty only covers repairs carried out at our factory. Should the instrument have been incorporated into other equipment that requires our engineers to perform the repair on site, a charge will be made for the engineer's time to and from the site, plus any expenses incurred.

The aforementioned provisions do not extend the original warranty period of any product that has been either repaired or replaced by R.D.P. Electronics.

THIS WARRANTY MAY BE NULL AND VOID SHOULD THE CUSTOMER FAIL TO MEET OUR TERMS OF PAYMENT.